Proc. of the 15th Int. Workshop on Slow Positron Beam Techniques and Applications, Prague, September 2–6, 2019

Positron Burst Detection Based on Silicon Photomultiplier Arrays and DRS4

Yingjie Wang[a,b], Haohui Tang[a,b], Jiale Cai[a,b], Peilin Wang[a,b], Xiaorou Han[a,b], Fuyan Liu[a,b], Xingzhong Cao[a,b], Baoyi Wang[a,b], Long Wei[a,b] and Zhiming Zhang[a,b*]

[a]Research Center of Radiographic Techniques and Equipment, Institute of High Energy Physics, Chinese Academy of Sciences, Yuquan Lu, Beijing, 100049, China

[b]School of Nuclear Science and Technology, University of Chinese Academy of Sciences, Yuquan Lu, Beijing, 100049, China

In this work, we propose a new positron annihilation lifetime spectrum measuring method for pulsed positrons. The spatially arranged positron burst detection system is based on a state-of-the-art calcium-doped LYSO crystal and silicon photomultiplier array, with readout by a multichannel fast waveform digitizing DRS4 chip; this system simultaneously provides high detection efficiency and decent timing resolution. The positron burst generation signal serves as the starting trigger and the timing signal of all the detector channels is the stopping signal, so that the time spread distribution is the lifetime spectrum. The current system has 2048-channel modularized crystals coupled to 2048-channel 3×3 mm^2 silicon photomultipliers. All analog signals from the detectors are digitized separately before implementing digital constant fraction discrimination by a field-programmable gate array. The performance of the single-channel detector was investigated and optimized by improving the silicon photomultiplier readout electronics and the light collection of the scintillator. Preliminary results showed that the best coincidence timing resolution by two identical, 5 mm long, single LYSO detectors was 84 ps and that the measurement was double the 511 keV coincidence of a ^{22}Na source.

DOI: 10.12693/APhysPolA.137.160

PACS/topics: 78.70.Bj

1. Introduction

The use of the positron annihilation lifetime spectrum (PALS), a monochromatic slow positron beam source with continuously adjustable energy, has recently been expanded to surface science and thin film material investigations [1]. Positron beam technology is now applied in material science for practical investigations of irradiation damage, ion implantation defects, and growth of film materials, as well as theoretical research into the Bose–Einstein condensation, antihydrogen synthesis, and antimatter physics. Moreover, potential applications also include the experimental studies on gravitational interaction, positron storage, positron energy conversion, and fusion reactor ignition.

The short-pulsed positron beam is an upgrade of the positron beam. Vast numbers of positrons (10^6 to 10^8) are concentrated and released in a transient pulse as short as several nanoseconds or even picoseconds [2, 3]. Effective detection and analysis of the annihilated gamma photons could therefore be useful for studying transient phenomenon during this very short period. This dynamic PALS method could meet the requirements for microstructural studies of materials, as it could allow observation of the dynamic microstructural changes in new functional materials, phase transition mechanisms, microdefect development, and the processes leading to changes in material dimensions, compositions, and external fields [4].

The key to dynamic PALS is the generation and detection of a high-intensity positron pulse. Currently, positron bursts can be generated by chopping and bunching a slow positron beam, whose intensity can reach up to 10^5 positrons per second. A laser-induced positron burst can achieve 10^8 positrons per pulse, and advanced high luminosity positron burst technology is developing steadily, indicating that issues involving the generation of the positron burst are being resolved. By contrast, the solution for detection of the intense positron burst detection has not yet been optimized.

The conventional detector is usually based on photomultiplier tubes (PMT) and bulk fast scintillators, such as PWO or BaF2 [5]. However, two detectors can only cover a limited solid angle, even if they are arranged very closely (Fig. 1a), and little can be done to the sample during the measurement. More importantly, bulk detectors readily pile up and saturate, thereby reducing the benefit of the high count rate feature of the positron burst.

2. Space distribution timing measurement concept

The features of a positron burst are very high intensity, very small pulse width, and low repeat frequency. We propose to adapt the high intensity positron

*corresponding author; e-mail: zhangzhm@ihep.ac.cn

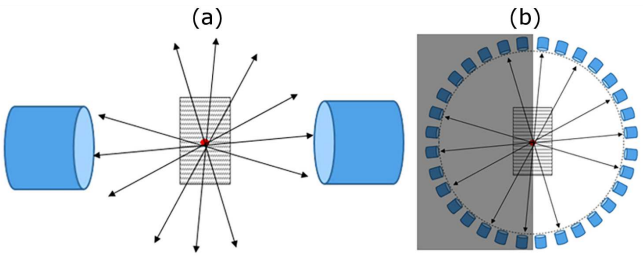

Fig. 1. (a) Traditional PALS detecting scheme, (b) space distribution detection scheme.

burst and fully utilize all the positrons in a pulse using a time-to-space concept to obtain a positron annihilation spectrum from the time accumulation by multichannel non-coincidence pixelated detectors [6], as shown in Fig. 1b.

Pixelated detectors are arranged on a hemispheric surface to cover a 2π solid angle. Because gamma photons generated by positron electron annihilation are paired and isotropic, half of the photons of the annihilated gamma pairs would strike the detecting surface, thereby carrying the lifetime information of all positrons in a burst. The use of the generation signal from the beam source as start signal and detection of each channel's signal as a stopping signal would allow recording of the time distribution of all channels. The timing resolution of the system depends on convolution of the positron pulse width and the timing resolution of the detectors. The intensity of positrons generated by a positron trap or laser-induced burst is as high as 10^5 to 10^8 positrons per pulse, whereas the total counts of a PALS is always of the order of 10^6. When the number of detector units equals to that of positrons in a burst, with proper distance and detecting efficiency, a high ratio of the gamma photons generated by a positron burst can be detected, a spectrum can be acquired instantly. Dynamic changes in the material could therefore be observed in real-time. A prototype system was designed and under development. The channel number of current system is on the order of 10^3, which means that a positron lifetime spectrum of 10^6 events requires 10^3 positron bursts at present.

3. Material and methods

3.1. Scintillator

The final coincidence timing resolution (CTR) of a scintillator-based detector is proportional to the square root of the scintillation rise time, decay time, and the total light collection, CTR $\propto \sqrt{\tau_r \tau_d / LY}$ [7]. When the rise time and decay time of a certain scintillator are decided, increasing the light collection can improve the timing resolution. The total light collection is proportional to the light output of the scintillator and the photon detection efficiency (PDE) of the sensor.

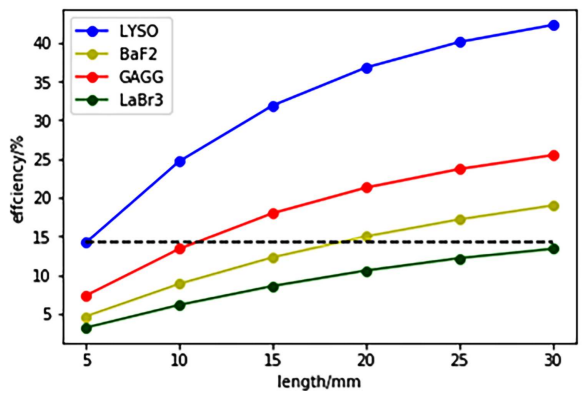

Fig. 2. The 511 keV gamma ray full energy detection efficiency of fast scintillators.

TABLE I

Properties of fast inorganic scintillators (equivalent length — length required to achieve the same 511 keV fullenergy ratio).

	Z_{eff}	Density [g/cm^3]	Light yield [photons/MeV]	Equivalent length [mm]
BaF_2	51	4.89	1800^a	15
$LaBr_3$	45	5.08	60000	21
GAGG	54	6.63	50000	8
LYSO	63	7.15	32000	5

^{a}fast component

The major contributing factor to the final light collection is the light output of the scintillator. Therefore, the light yield of the scintillator should be high. Meanwhile, in a PALS application, 511 keV gamma rays deposit energy in detectors through Compton scattering and a photoelectric effect. The cross-sections are proportional to effective atomic number Z and Z^5 of the scintillator. Therefore, scintillators should have both a high light output and high stopping power at the same time.

We compared the light output, density, and equivalent atomic number (Z_{eff}) of conventional scintillators and new fast scintillators like calcium-doped LYSO, GAGG, BaF_2, and $LaBr_3$. The detection efficiency of the scintillators for 511 keV gamma rays was simulated using GEANT4. The cross-section of the crystal was fixed as 3×3 mm^2. The ratio of the full energy peak counts to the total incident 511 keV gamma counts was then simulated while changing the crystal length from 5 mm to 30 mm every 5 mm. The results are shown in Fig. 2.

The black dashed line indicates that to achieve the same full energy detection ratio, a 5 mm LYSO is equivalent to an 8 mm long GAGG, a 15 mm long BaF_2, or a 21 mm long $LaBr_3$. The results are listed in Table I, together with the equivalent atomic number, density, and light yield of the scintillators. Although the stopping power is better for BaF_2 than for $LaBr_3$, the light output of the fast component is too low. Therefore LYSO could be a better choice for timing applications.

One possible disadvantage of the LYSO is the spontaneous radiation of ^{176}Lu, which is about 300 counts/(cm^3 s). However, in the positron burst detection system, the stopping signal of each channel will be generated in several nanoseconds or less, so the background radiation of the LYSO is negligible during this short period.

3.2. Photosensor

The timing performance of PMT-based detectors is limited because of their quantum efficiency (QE). The QE of the best bialkali photocathode PMT is about 25%, while a silicon photomultiplier (SiPM) PDE could easily reach as much as 50% given a sufficiently high over voltage [8]. The transit time and the transit time spread of the PMT are high due to the amplification process, whereas the SiPM gain process can be very fast. Consequently, the single photon time resolution is much better and is comparable to the best multi-channel plate photomultiplier tubes (MCP-PMT) at high excess bias voltage [9].

In this work, the ON Semiconductor J30035 SiPM is used as the photosensor. It is a 3×3 mm^2 SiPM with peak sensitive light spectrum of 420 nm and PDE of about 50% at an over voltage of 6 V. The readout circuit is shown in Fig. 3. The SiPM is biased by negative voltage, with the cathode connecting to the ground. The signal is extracted from the anode before being amplified and differentiated by a radiofrequency amplifier. Although the J30035 has a fast output, its signal is rather small when compared with the standard output. A faster and shorter signal could be obtained by appropriate treatment of the standard anode signal.

3.3. Digital electronics

Every channel's wave form is digitized by the DRS4, which is a 9-channel switched capacitor array working at the sampling speed of 5 GSPS. The analog waveform is stored in 1024 sampling cells per channel and can be read out after sampling via a shift register clocked at 33 MHz for external digitization [10]. A 4-channel DRS4 board was developed for coincidence measurement. After the DC offset calibration, the noise improved from 10.5 mV to 0.4 mV root mean square. A pulse generator was used to send the same square wave to two DRS4 channels. Using one as a start and the other as a stop, the time jitter of the digital electronics was measured as 21.5 ps.

4. System design

The spatially arranged positron burst detection system is based on a state-of-the-art Ca:LYSO crystal and self-developed SiPM array, with readout by a multichannel fast waveform DRS4 digitizing board [11] for simultaneous achievement of high sensitivity and better timing resolution. The current system has 32 detector modules, each composed of an 8 × 8 assembly of 3 × 3 × 5 mm^3 LYSO crystals coupled to a 64-channel 3 × 3 mm^2 SiPM array. All timing signals from a detector are digitized by a 64-channel high-speed sampling board based on the DRS4 chip and then implemented for digital timing by FPGA, as shown in Fig. 4a. The system consists of 2048-channel LYSO + SiPM detectors and a 2048-channel DRS4. The detectors are distributed on the surface of a 40 cm diameter hemisphere (Fig. 4b).

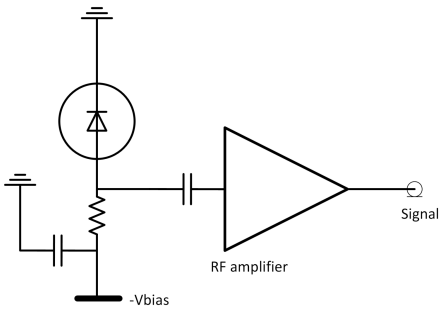

Fig. 3. SiPM readout circuit.

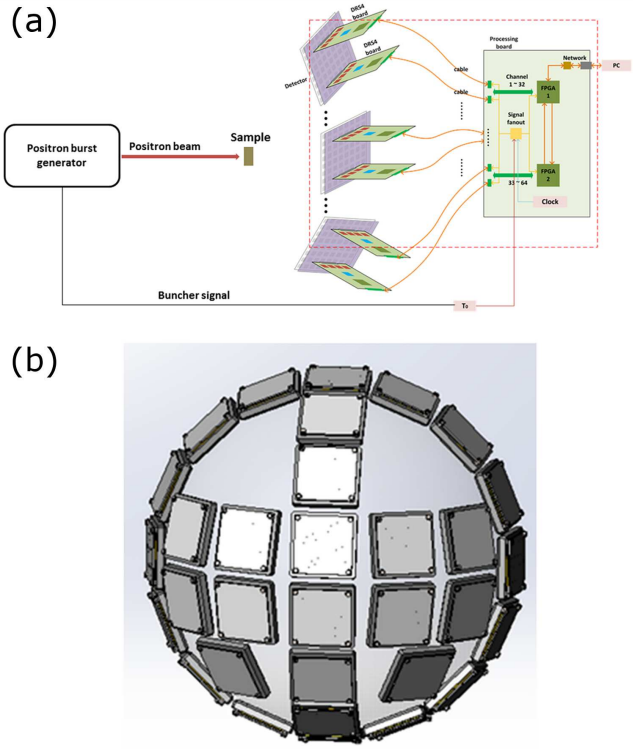

Fig. 4. Schematic (a) and structural (b) diagram of the positron burst detecting array system.

5. Results

The single-channel detector performance was investigated and optimized by improvement of the LYSO scintillation light collection, the SiPM readout, and the temperature stability. The coincidence timing resolution was then measured according to the setup shown in Fig. 5.

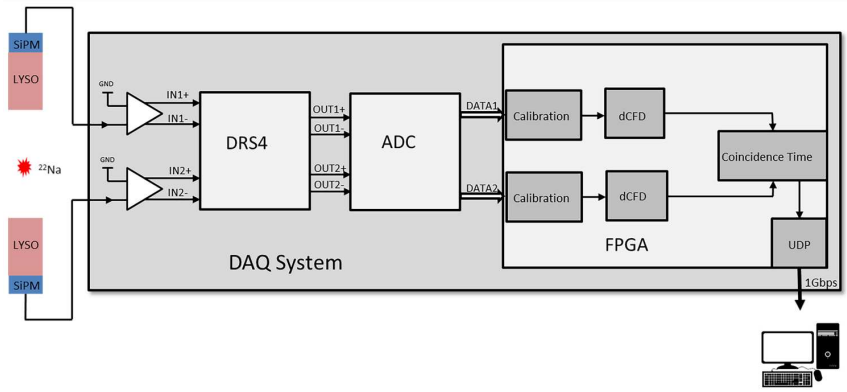

Fig. 5. CTR measurement setup consisting of two single-channel detectors.

TABLE II

Coincidence timing resolution results of two single-channel detectors at different crystal lengths

Bias voltage [V]	CTR [ps]		
	5 mm	10 mm	15 mm
V_{op}	112	130	158
$V_{op}+0.5$	109	115	149
$V_{op}+1$	100	120	135
$V_{op}+1.5$	94	111	127
$V_{op}+2$	94	112	127
$V_{op}+2.5$	84	103	130
$V_{op}+3$	87		

Two identical single channel detectors were placed 5 cm apart from each other. An 8 μCi ^{22}Na point source was placed in the middle. The environment temperature was stabilized around 25 °C. The original signals were selected by amplitude before digital constant fraction discrimination. Double 511 keV coincidence events were selected and stored.

The preliminary results are listed in Table II. The best double 511 keV coincidence timing resolution of two single-channel detectors was 84 ps when the crystal length was 5 mm. Module level and system level studies are being carried out.

6. Conclusion and outlook

In this paper, we proposed a new positron annihilation lifetime spectrum measuring method for the detection of high intensity positron bursts. A detector based on a calcium-doped LYSO crystal and SiPMs was developed for fast and effective detection of 511 keV gamma rays. A digital DRS4 sampling board was developed for evaluation of the method. Testing of the coincidence timing resolution of two identical detectors for double 511 keV coincidence gave a best result of 84 ps.

The timing resolution is substantially improved over that of conventional PALS detectors. The performance of the multi-channel DRS4 board may degenerate due to external clock accuracy and non-uniformity. However, the final timing resolution of the system could still be estimated at better than 150 ps. With the integration of a short-pulsed laser-induced positron burst, dynamic PALS will be on its way.

Acknowledgments

This work was supported in part by the National Natural Science Foundation of China (Grant No. 11475206), the Scientific Research Instruments Development Project of the Chinese Academy of Sciences (Grant No. YJKYYQ20180007), and an Innovation Project of the Institute of High Energy Physics.

References

[1] R. Suzuki, T. Ohdaira, T. Mikado, *Radiat. Phys. Chem.* **58**, 603 (2000).

[2] H. Chen, S.C. Wilks, J.D. Bonlie, E.P. Liang, J. Myatt, D.F. Price, D.D. Meyerhofer, P. Beiersdorfer, *Phys. Rev. Lett.* **102**, 105001 (2009).

[3] R.G. Greaves, J. Moxom, *AIP Conf. Proc.* **692**, 140 (2003).

[4] D.B. Cassidy, S.H.M. Deng, H.K.M. Tanaka, A.P. Mills, *Appl. Phys. Lett.* **88**, 194105 (2006).

[5] D.B. Cassidy, A.P. Mills, *Nucl. Instrum. Methods Phys. Res. A* **580**, 1338 (2007).

[6] B.Y. Wang, P. Kuang, F.Y. Liu, Z.J. Han, X.Z. Cao, P. Zhang, *Nucl. Instrum. Methods Phys. Res. A* **885**, 119 (2018).

[7] S. Gundacker, R.M. Turtos, E. Auffray, P. Lecoq, *Nucl. Instrum. Methods Phys. Res. A* **891**, 42 (2018).

[8] F. Acerbi, M. Cazzanelli, A. Ferri, A. Gola, L. Pavesi, N. Zorzi, C. Piemonte, *IEEE J. Sel. Top. Quant.* **20**, 3804608 (2014).

[9] F. Acerbi, A. Ferri, A. Gola, M. Cazzanelli, L. Pavesi, N. Zorzi, C. Piemonte, *IEEE Trans. Nucl. Sci.* **61**, 2678 (2014).

[10] Paul Scherrer Institute, DRS Chip.

[11] J. Cai, D. Li, Y. Wang, Z. Zhang, P. Wang, H. Tang, B. Wang, X. Cao, F. Liu, L. Wei, *Radiat. Detect. Technol. Methods* **3**, 33 (2019).